GREE
Change for life

Owner's Manual

Original Instructions

U-match Kit

Models:
GUM/A-S

Thank you for choosing this product. Please read this Owner's Manual carefully before operation and retain it for future reference.

If you have lost the Owner's Manual, please contact the local agent or visit www.gree.com or send an email to global@gree.com.cn for the electronic version.

GREE ELECTRIC APPLIANCES,INC.OF ZHUHAI

To Users

Thank you for selecting Gree's product. Please read this instruction manual carefully before installing and using the product, so as to master and correctly use the product. In order to guide you to correctly install and use our product and achieve expected operating effect, we hereby instruct as below:

(1) This appliance can be used by children aged from 8 years and above and persons with reduced physical, sensory or mental capabilities or lack of experience and knowledge if they have been given supervision or instruction concerning use of the appliance in a safe way and understand the hazards involved. Children shall not play with the appliance. Cleaning and user maintenance shall not be made by children without supervision.

(2) In order to ensure reliability of product, the product may consume some power under stand-by status for maintaining normal communication of system. If the product is not to be used for long, cut off the power supply; please energize the product in advance before reusing it.

(3) Please properly select the model according to actual using environment; otherwise it may impact the using convenience.

(4) This product has gone through strict inspection and operational test before leaving the factory. In order to avoid damage due to improper disassembly and inspection, which may impact the normal operation of unit, please do not disassemble the unit by yourself. You can contact with the special maintenance center of our company if necessary.

(5) When the product is faulted and cannot be operated, please contact with our maintenance center as soon as possible by providing the following information.

   1) Contents of nameplate of product (model, product No., ex-factory date).

   2) Malfunction status (specify the situations before and after the error occurs).

(6) All the illustrations and information in the instruction manual are only for reference. In order to make the product better, we will continuously conduct improvement and innovation. We have the right to make necessary revision to the product from time to time due to the reason of

sales or production, and reserve the right to revise the contents without further notice.

(7) This product must not be installed in a laundry.

(8) If the supply cord is damaged, it must be replaced by the manufacturer, its service agent or similarly qualified persons in order to avoid a hazard.

(9) Gree Electric Appliances Inc. of Zhuhai assumes no responsibility for personal injury, property loss or equipment damage caused by improper installation and commissioning, unnecessary maintenance, or not following relevant national rules and regulations, industrial standards and requirements in this instruction manual.

(10) The final right to interpret for this instruction manual belongs to Gree Electric Appliances Inc. of Zhuhai.

Exception Clauses

Manufacturer will bear no responsibilities when personal injury or property loss is caused by the following reasons:

(1) Damage the product due to improper use or misuse of the product.

(2) Alter, change, maintain or use the product with other equipment without abiding by the instruction manual of manufacturer.

(3) After verification, the defect of product is directly caused by corrosive gas.

(4) After verification, defects are due to improper operation during transportation of product.

(5) Operate, repair, maintain the unit without abiding by instruction manual or related regulations.

(6) After verification, the problem or dispute is caused by the quality specification or performance of parts and components that produced by other manufacturers.

(7) The damage is caused by natural calamities, bad using environment or force majeure.

Contents

1 Safety Notice (Please be sure to abide them) 1

2 Product Introduction 4

2.1 Layout 4

2.2 Product Port Introduction 4

2.3 Product Collocation 5

2.4 Standard Parts 6

3 Installation 6

3.1 Installation Preparation 6

3.2 Unit Installation 10

3.3 Electrical Installation 15

3.4 Check after Installation 20

3.5 Test Running 20

4 Operation Statement 21

5 Maintenance 22

5.1 Error Code 22

5.2 Maintenance 24

5.3 Notice on Maintenance 24

5.4 After-sales Services 24

This marking indicates that this product should not be disposed with other household wastes throughout the EU. To prevent possible harm to the environment or human health from uncontrolled waste disposal, recycle it responsibly to promote the sustainable reuse of material resources. To return your used device, please use the return and collection systems or contact the retailer where the product was purchased. They can take this product for environmental safe recycling.

1 Safety Notice (Please be sure to abide them)

SPECIAL WARNING:

(1) Be sure to comply with national gas regulations.

(2) Do not pierce or burn.

(3) The appliance shall be stored in a room without continuously operating ignition sources (for example: open flames, an operating gas appliance or an operating electric heater).

PROHIBITED: This sign indicates that the items must be prohibited. Improper operation may cause severe damage or death to people.

WARNING: If not abide them strictly, it may cause severe damage to the unit or the people.

NOTE: If not abide them strictly, it may cause slight or medium damage to the unit or the people.

OBSERVED: This sign indicates that the items must be observed. Improper operation may cause damage to people or property.

WARNING:

This product is allocated for the comfortable air conditioners only and can't be installed in corrosive, inflammable, explosive or oily environments or places with special requirements (for example, a kitchen). Otherwise, the unit will not be able to operate normally, have a shorter service life, or even cause fire hazard or serious injury. As for such places, please adopt special air conditioners with anti-corrosive or anti-explosion feature.

Before using this product, please read the instruction manual.

Before installing this product, please read the instruction manual.

PROHIBITED!	
(1)	The air conditioner should be grounded to avoid electric shock. Do not connect the ground wire to gas pipe, water pipe, lightning arrester or telephone wire.
(2)	The appliance shall be stored in a room without continuously operating open flames (for example an operating gas appliance) and ignition sources (for example an operating electric heater).
(3)	According to federal/state/local laws and regulations, all packages and transportation materials, including nails, metal or wooden parts, and plastic packing material, must be treated in a safe way.

WARNING!	
(1)	Please install according to this instruction manual. Installation must be performed in accordance with the requirement of NEC and CEC by authorized personnel only.
(2)	All operation personnel shall have the effective certificate issued by assessment organization with industry recognition to identify if they have the qualification required by the assessment standard with industry recognition.
(3)	Servicing shall only be performed as recommended by the equipment manufacturer. Maintenance and repair requiring the assistance of other skilled personnel shall be carried out under the supervision of the person competent in the use of flammable refrigerants.
(4)	The appliance shall be installed in accordance with national wiring regulations.
(5)	The fixed wires connecting to the appliance must be configured with all-pole disconnection device under voltage grade III according to wiring rules.
(6)	Air conditioner should be stored with protective measures against mechanical damage caused by accident.
(7)	If the installation space for air conditioner pipe is too small, adopt a protective measure to prevent the pipe from physical damage.
(8)	During installation, use the specialized accessories and components, otherwise water leakage, electric shock or fire hazard may occur.
(9)	Please install the air conditioner in a secure place that can withstand the weight of air conditioner. Insecure installation may cause the air conditioner falling down and lead to injury.
(10)	Be sure to adopt independent power circuit. If the power cord is damaged, it must be repaired by the manufacturer, service agent or other professional agents.
(11)	The air conditioner can be cleaned only after it is turned off and power-disconnected, otherwise electric shock may occur.
(12)	The air conditioner is not intended to be cleaned or maintained by children without supervision.

WARNING!
(13) Do not operate the air conditioner with wet hands. Do not wash or sprinkle water on the air conditioner, otherwise malfunction or electric shock will occur.

NOTES!
(1) Never stop the air conditioner by directly cutting off the power.
(2) Please select the proper copper pipe according to the requirement for pipe thickness.
(3) The product applies to indoor installation only. Please don't install it in the following locations: 1) oily environment or places with volatile liquid. 2) places with corrosive gas.
(4) Adopt proper measures to protect the outdoor unit from small animals because they may damage the electric components and cause malfunction of this product.

OBSERVED!
(1) If wired control is to be used, it should be connected first before powering up the unit, otherwise the wired control may not be able to use.
(2) When installing the indoor unit, keep it away from television, wireless waves, and fluorescent.
(3) Only use soft dry cloth or slightly wet cloth with neutral detergent to clean the casing of this product.

2 Product Introduction

2.1 Layout

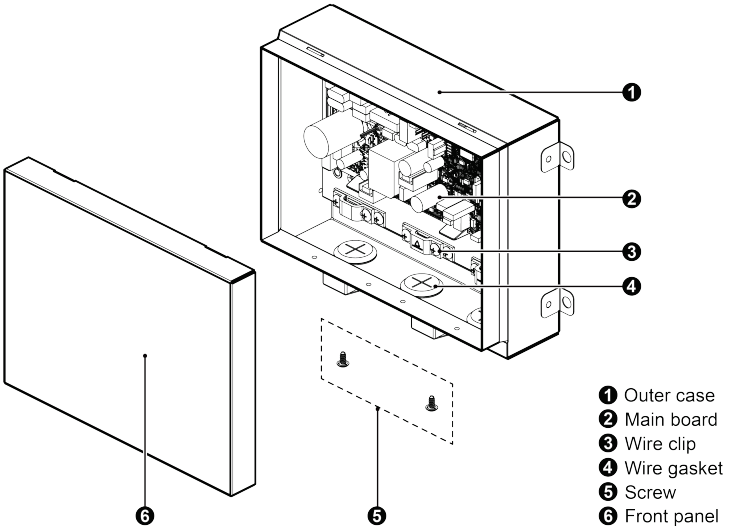

2.2 Product Port Introduction

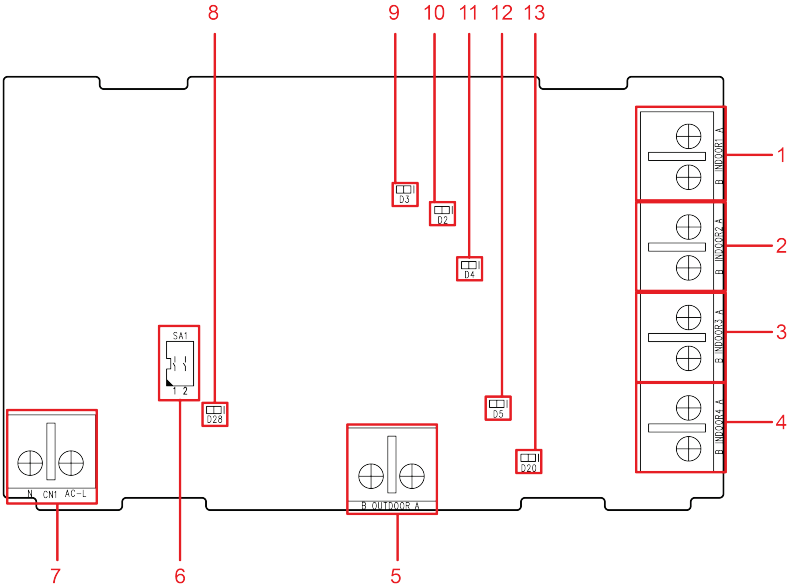

No.	Main Board Display	Introduction	No.	Main Board Display	Introduction
1	INDOOR1	Communication interface of IDU1	8	D28	Communication LED of IDU1
2	INDOOR2	Communication interface of IDU2	9	D3	Power LED
3	INDOOR3	Communication interface of IDU3	10	D2	Communication LED of ODU
4	INDOOR4	Communication interface of IDU4	11	D4	Communication LED of IDU2
5	OUTDOOR	Communication interface of ODU	12	D5	Communication LED of IDU3
6	SA1	DIP switch	13	D20	Communication LED of IDU4
7	CN1	Power interface	—	—	—

NOTE: The above LED will only blink when relevant wiring board is connected.

2.3 Product Collocation

Cooling Capacity of ODU(*100W)	Quantity of IDU		
	Twin 50:50 (*100W)	Triple 33:33:33 (*100W)	Quadruple 25:25:25:25 (*100W)
71	35*2	—	—
100	50*2	35*3	—
125	71*2	50*3	35*4
140	71*2	50*3	35*4
160	85*2	71*3	50*4

Notes for model selection:

(1) The type, cooling capacity and model of the IDUs corresponding to the same ODU shall be consistent.

(2) Please refer to the referenced allocation method.

(3) The IDUs shall be turned on/off at the same time, user setting is unitary and subsequent operation is valid.

(4) Don’t collocate it with the dry contact. The functions of remote monitoring, centralized control and smart eye panel are unavailable.

(5) When using this product, the gate control can and only be connected to either IDU. When the gate control card is pulled out, all indoor unit operation are invalid.

2.4 Standard Parts

No.	Name	Appearance	Quantity	Usage
1	Owner's Manual		1	—
2	Mark		1	1.Paste on the indoor electrical box. 2.Correspond to the KIT main board terminal number. Convenient to locate fault indoor machine. (only for duct type.)
3	Wire Clip		1	Used with three or four indoor units.

3 Installation

3.1 Installation Preparation

3.1.1 Installation Notice

Selection of installation location (choose the following suitable installation locations)

(1) The product can't be installed in the room with special requirements like kitchen and laundry.

(2) Please install it in the room without open fire and ignition source.

(3) Select those places which can bear 4 times the weight of the kit.

(4) The piping length and wiring length should be within the allowable range.

(5) Indoor unit, power cord, connecting wires and communication cords should be at least 1m from television and radio. This is to prevent image interference or noise (Even at a distance of 1m, a very strong electric wave may still generate noise).

3.1.2 Selection of Connection Pipe

—	Fitting Pipe	Allowable Value
The maximum length of connection pipe	L1+L2+L3+a+b+c+d	Same as the outdoor unit
The minimum length of connection pipe	L1+L2+L3+a+b+c+d	Same as the outdoor unit
Height difference of connection pipe	H1	Same as the outdoor unit
Height difference of either two IDUs	H2	0.5m
Length difference of the connection pipe behind either two IDU branch	(L3+b)-(L2+c)	8m
The maximum length of either connection pipe behind branch	L3+a; L3+b; L2+c; L2+d	20m

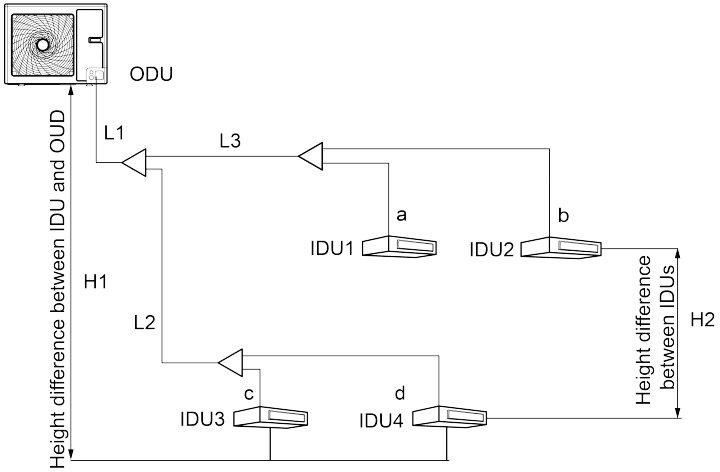

3.1.3 Selection of Branch

(1) Pipe diameter of the ODU of branch shall subject to the ODU.

(2) Pipe diameter of the IDU of branch shall subject to the IDU.

(3) Selection of the branch among IDUs shall subject to the IDU capacity.

(4) Branch pipe selection of two indoor units

Cooling Capacity of ODU (*100W)	Cooling Capacity of IDU (*100W)	Model* Quantity
71	35	FQ25*1
100	50	FQ25*1
125	71	FQ26*1
140	71	FQ26*1
160	85	FQ26*1

(5) Branch pipe selection of three indoor units

Cooling Capacity of ODU (*100W)	Cooling Capacity of IDU (*100W)	Model* Quantity
100	35	FQ25*1 FQ26*1
125	50	FQ26*2
140	50	FQ26*2
160	71	FQ27*2

(6) Branch pipe selection of four indoor units

Cooling Capacity of ODU (*100W)	Cooling Capacity of IDU (*100W)	Model* Quantity
125	35	FQ25*2 FQ26*1
140	35	FQ25*2 FQ26*1
160	50	FQ26*3

3.1.4 Selection of Pipe Size

Selection of pipe size shall base on the corresponding upstream or downstream capacity:

(1) Pipe between ODU and branch shall match with the pipe diameter of ODU.

(2) Pipe between IDU branch and IDU shall match with the pipe diameter of IDU.

Item / Cooling Capacity (*100W)	Size of Fitting Pipe (inch)	
	Liquid Pipe	Gas Pipe
35	Φ1/4	Φ3/8
50	Φ1/4	Φ1/2
71-160	Φ3/8	Φ5/8

3.1.5 Setting of IDU Quantity

IDU with different quantity is realized through controlling the capacity DIP switch on main board of controlling parts, unit capacity DIP switch is “SA1” on the main board, please refer to the detailed setting:

IDU Quantity	SA1	
	1	2
Two	1	0
Three	0	1
Four	1	1

Dial the DIP switch to the right position. It’s forbidden to dial it to the middle. Dial it to the “ON” direction means “0”, the opposite direction means “1”, as shown in the following fig: (Note: The black part is the dialing rod.)

The address of 1 and 2 is “1,0”.

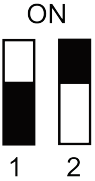

3.2 Unit Installation

3.2.1 Installation Diagrams

Installation Diagram Twin Application

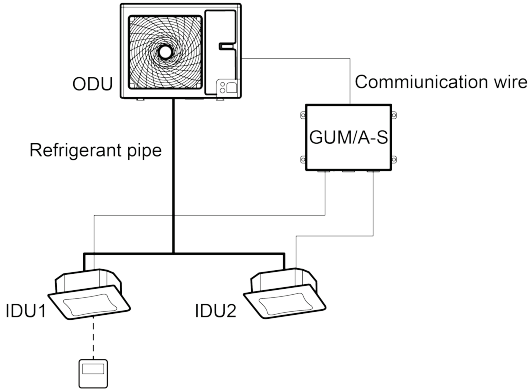

Installation Diagram Triple Application

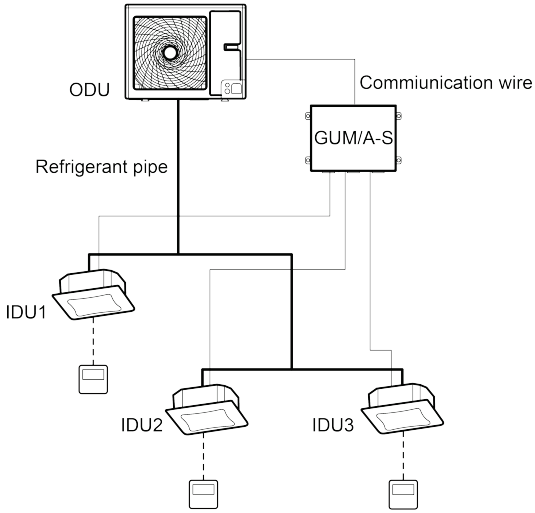

Installation Diagram Double Twin Application

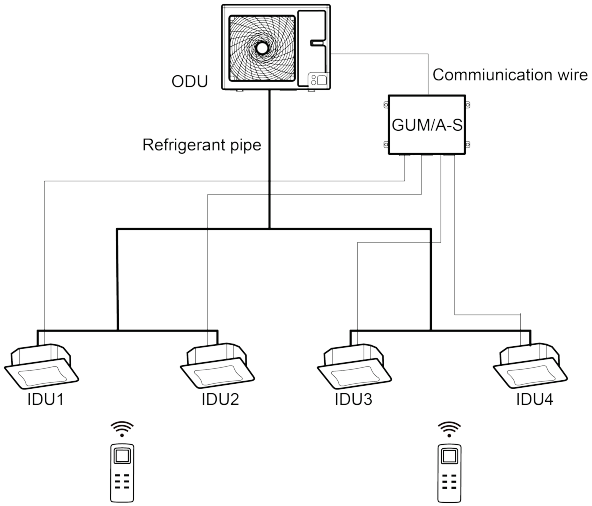

3.2.2 Unit Dimension

WARNING!	
(1)	Install the product in places which can support at least 5 times the product weight.
(2)	In the installation location is not firm enough, the product might fall down and cause personal injury.
(3)	Please twist the screw to prevent the product from falling.

Unit:mm

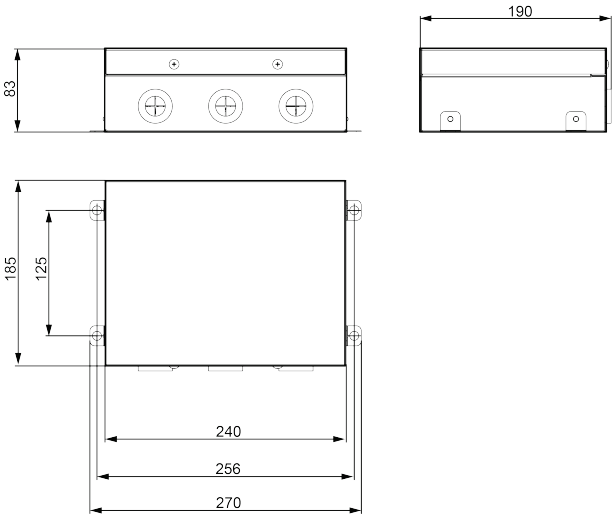

3.2.3 Diagram of Installation Space and Location

Unit:mm

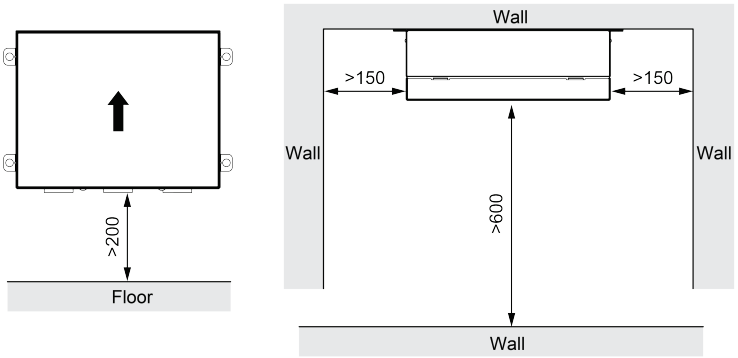

3.2.4 Fix the Controlling Parts

(1) Install the controlling parts to the surface.

(2) Open the cover of controlling parts.

(3) Arrange electric wire: refer to the content in later chapter.

(4) Install screw nut.

(5) Block the unnecessary hole with plug.

(6) Cover it tight to ensure the controlling parts are not leaked.

3.2.5 Installation of the Manifold

The main function of manifold is used to shunt the refrigerant. Pay attention to the following points when installing it:

(1) When installing the manifold, it should be as close as possible to the indoor unit to reduce the influence of the indoor unit manifold on the refrigerant distribution.

(2) The manifold must be matched with the equipment. The other products which are not specified by the manufacturer shall not be used.

(3) Check the model before installing the manifold. Do not use it incorrectly.

1) Y-type manifold

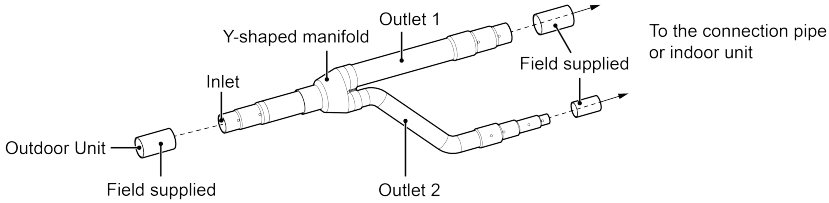

2) Manifold has several pipe sections with different pipe size, which facilitates to match with various copper pipes. Use pipe cutter to cut in the middle of the pipe section with different pipe size.

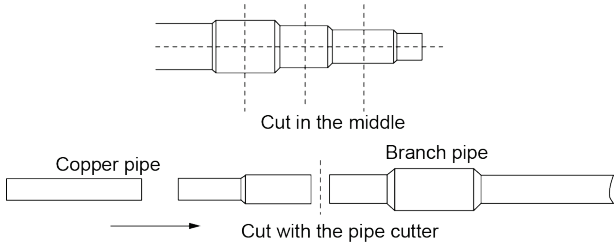

3) Y-type manifold can be installed horizontally. Confirm the position and then weld the manifold pipe.

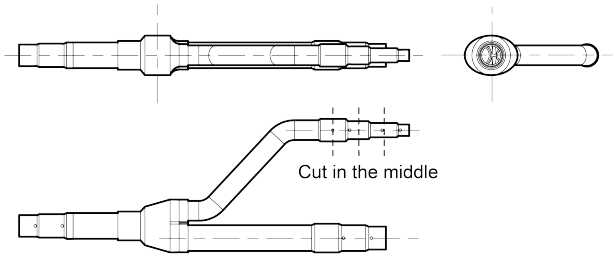

4) The length of a straight pipe between two manifolds cannot be more than 800mm.
5) The length of a straight pipe before the main pipe port of the manifold cannot be more than 800mm.

6) The length of a straight pipe between the branch of the manifold and the IDU cannot be more than 800mm.

Unit: mm

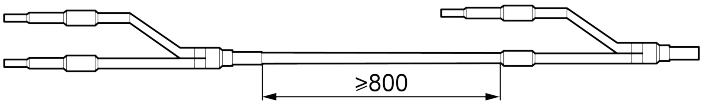

3.2.6 Fixation of Manifold

(1) There must be three fixing points for both horizontal installation of the Y-type manifold.

Fixing point 1: 100mm on the main inlet manifold from the welding point.

Fixing point 2: 200mm on the main branched pipe from the welding point.

Fixing point 3: 250mm on the branched pipe from the welding point.

Unit: mm

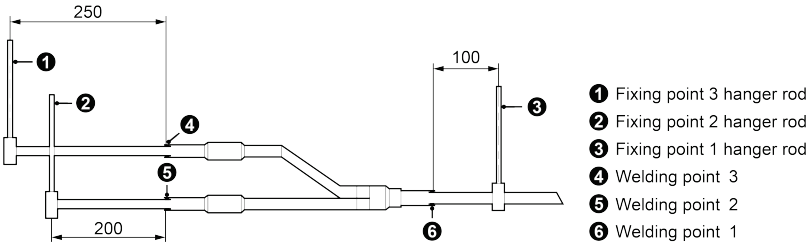

(2) Suspend the header to the ceiling, and be sure to install the T-type manifold so that the outlet pipes are horizontal at the lower side.

(3) The branches of the manifold should be parallel and should not be overlapped.

(4) The liquid pipe and the gas pipe should have the same pipe length and the same laying circuit.

Since the structure of the manifold is relatively complicated, it must be rigorous and careful for heat preservation to ensure the tight insulation.

3.2.7 Additional refrigerant charge

Additional refrigerant charge and the length of the maximum connection pipe shall subject to the model of ODU of the unit installed. The total length of the connecting pipes is calculated according to the total length of all connecting pipes.

3.3 Electrical Installation

3.3.1 Electrical Installation Requirements and Notices

WARNING:

The electrical installation for the air conditioner should observe the following requirements:

① The electrical installation must be conducted by professionals in compliance with local laws and regulations and the instructions in this manual. Never extend the power cord. The electric circuit must be equipped with a circuit breaker and air switch both with sufficient capacity.

② The unit's operating power must be within the nominal range stated in the instruction manual. Use a specialized power circuit for the air conditioner. Do not draw power from another power circuit.

③ The air conditioner circuit should be at least 1.5m away from any inflammable surface.

④ The external power cord, connection wire of indoor and outdoor units and the communication cords must be effectively fixed.

⑤ The external power cord, connection wire of indoor and outdoor units and the communication cords can't directly contact any hot objects. For example: they must not contact chimney pipes, warm gas pipes or other hot objects.

⑥ The external power cord, communication cords, and the connection wire of indoor and outdoor units must not be squeezed. Never pull, stretch or bend the wires.

⑦ The external power cord, communication cords and the connection wire of indoor and outdoor units must not collide with any metal beam or edge on the ceiling, or touch any metal burrs or sharp metal edge around.

⑧ Connect wires correspondingly by referring to the circuit diagram labeled on the unit or electric box. Screws must be tightened up. Slipped screws must be replaced by specialized flat-head screws.

⑨ Please use the power cables that are delivered along with the air conditioner. Do not change the power cables arbitrarily. Do not change the length and

terminals of the power cables. If you want to change the power cables, please contact Gree's local service center.

⑩ Wiring terminals should be connected firmly to the terminal board. Loose connection is forbidden.

⑪ After the electrical installation is finished, please use wire clamps to secure the power cord, connection wire of indoor and outdoor units and the communication cords. Make sure the wires are not clamped too tight.

⑫ The wire gauge of power cord should be large enough. Damaged power cord or other wires must be replaced by specialized wires. Wiring work must be done according to national wiring rules and regulations.

3.3.2 Electrical Parameter

Model	Power	Fuse capacity	Circuit breaker capacity	Minimum transverse area of power cord
	V/Ph/Hz	A	A	mm²
GUM/A-S	220-240V ~50/60Hz	3.15	6	1.0

NOTES:

① Fuse is located on the main board.

② Install a circuit breaker at every power terminal near the units (indoor and outdoor units) with at least 3mm contact gap. The units must be able to be plugged or unplugged.

③ Circuit breaker and power cord specifications listed in the above table are determined based on the maximum power input of the units.

④ Specifications of power cords listed in the above table are applicable in a working condition where ambient temperature is 40°C and multi-core copper cable (e.g. YJV copper cable, with insulated PE and PVC sheath) is protected by a conduit, and is resistant to 90°C in maximum (See IEC 60364-5-52). If working condition changes, please adjust the specifications according to national standards.

⑤ Specifications of circuit breaker are based on a working condition where the working temperature is 40°C. If working condition changes, please adjust the specifications according to national standards.

⑥ Adopt 2pc of 0.75mm² power cords to be the communication cords between indoor and outdoor units. The maximum length is 100m. Please select a proper length according to local conditions. Communication cords must not be twisted together. To be in compliance EN 55014, it is necessary to use 8 meters long wire.

⑦ Adopt 2pc of 0.75mm² power cords to be the communication cords between wired control and indoor unit. The maximum length is 30m. Please select a proper length according to local conditions. Communication cords must not be twisted together. To be in compliance EN 55014, it is necessary to use 7.5 meters long wire.

⑧ The wire gauge of communication cord should not be less than 0.75mm². It's recommended to use 0.75mm² power cords as the communication cords.

3.3.3 Connection of Power Cord and Communication Cord

(1) For solid wires (as shown below):

1) Use wire cutters to cut off the wire end and then peel away about 25mm of the insulation layer.
2) Use a screwdriver to unscrew the terminal screw on the terminal board.
3) Use nippers to bend the solid wire into a ring that fits the terminal screw.
4) Form a proper ring and then put it on the terminal board. Use a screwdriver to tighten up the terminal screw.

(2) For strand wires (as shown below):

1) Use wire cutters to cut off the wire end and then peel away about 10mm of the insulation layer.
2) Use a screwdriver to unscrew the terminal screw on the terminal board.
3) Use a round terminal fastener or clamp to fix the round terminal firmly on the peeled wire end.
4) Locate the round terminal conduit. Use a screwdriver to replace it and tighten up the terminal screw (as shown below).

Unit: mm

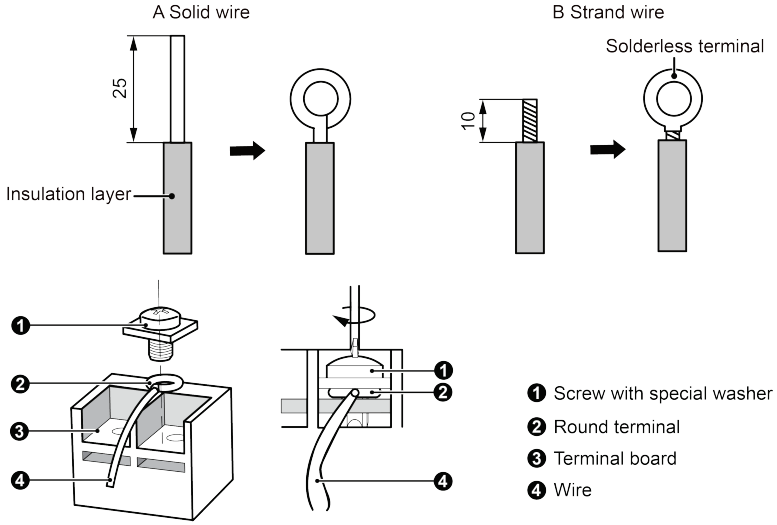

(3) How to connect the connection wire and power cord.

Lead the connection wire and power cord through the insulation tube. Then fix the wires with wire clamps (as shown in the following figure).

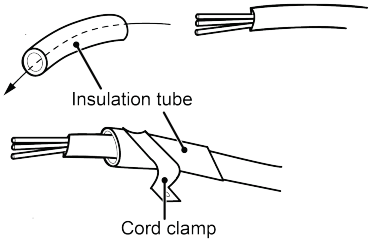

WARNING!
(1) Before working, please check whether the indoor and outdoor units are powered on.
(2) Match the terminal numbers and wire colors with the colors indicated in the indoor unit.
(3) Wrong wire connection may burn the electrical components.
(4) Connect the wires firmly to the wiring box. Incomplete installation may lead to fire hazard.
(5) Please use wire clamps to secure the external covers of connecting wires. (Insulators must be clamped securely; otherwise, electric leakage may occur.)
(6) Ground wire should be connected.

(4) Electric Wire Among IDU, ODU and Kit Board.

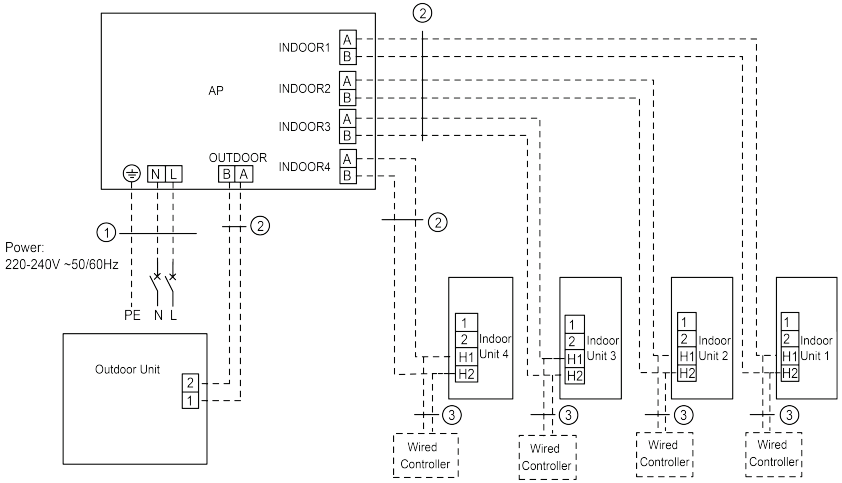

①	Power cords 3×1.0mm²
②	Communication cords 2×0.75mm²
③	Communication cords 2×0.75mm²

NOTES:

1) For No.③ wiring, when two sets of wiring are connected to the same terminal, the wiring must be secure.
2) If the unit is equipped with three or four indoor units, it needs to fix the communication wires of indoor units with the wire clip provided in the packaging accessories.

(5) Electrical wiring for box.

WARNING!	
(1)	High and low voltage wires should be led through different rubber rings of the electric box cover.
(2)	Do not bundle up the connection wire and communication wire of wired control or lay them side by side, otherwise errors will occur.
(3)	Use screws to tighten up the connection wires and power cords of indoor and outdoor units on the terminal board. Wrong connection may lead to fire hazard.
(4)	If communication wire and power cords are not correctly connected, the product may get damaged.
(5)	Ground the indoor and outdoor units through connecting the ground wire.

WARNING!
(6) The units should comply with applicable local and national rules and regulations on power consumption.

3.3.4 Installation Statement of Wired Controller

The wired controller can match with either IDU, but every IDU can match with just one wired controller. When used this product, the wired controller cannot be set as a slave wired controller. For duct type unit, the wired controller is standard configuration and other IDUs are optional. For duct type unit, the wireless controller is optional and other IDUs are standard configuration.

Please refer to the installation statement of wired controller for installation.

3.4 Check after Installation

Check Items after Installation.

Check items	Possible events due to improper installation
Is the main body installed securely?	The unit may fall down, vibrate or produce noise.
Is the voltage consistent with that stated on the nameplate?	The unit may fail or its components may get burned.
Are the wires and pipes installed correctly?	The unit may fail or its components may get burned.
Has the unit been safely grounded?	Risk of electric leakage.
Do the specifications of wires comply with the requirement?	The unit may fail or its components may get burned.

3.5 Test Running

Preparation before connecting the power:

(1) Power must not be connected if the installation work is not completed.

(2) Control circuit is correct and all the wires are firmly connected.

(3) Cut-off valves of the gas pipe and liquid pipe are open.

(4) The inside of the unit should be clean. Take irrelevant objects out if there is any.

(5) When the inspection is completed, install the upper cover.

Operation after connecting the power:

(1) If all the above works are finished, power on the unit.

(2) If the outside temperature is more than 30°C, heating mode can't be enabled.

(3) Make sure the indoor and outdoor units can run normally.

(4) If there's sound of liquid shock when the compressor is running, then stop the product immediately. Wait until the electric heating belt is heated enough, and then restart the product.

(5) Feel the air flow of the indoor unit to see if it is normal.

(6) Press the swing button or speed control button on remote control or wired control to see if the fan can run normally.

NOTES:

① If you use remote control to turn off the unit and then immediately turn the unit on again, compressor will need 3min to restart. Even if you press "ON/OFF" button on the remote control, it won't be started up right away.

② If the wired controller displays nothing, maybe the communication cord between IDU and wired controller is not connected well, or the IDU is not energized.

4 Operation Statement

Please check and refer to the wired controller or remote control manual.

5 Maintenance

5.1 Error Code

WARNING!
(1) If abnormal things (for example, awful smell) occur, please stop the unit immediately and disconnect power. Then contact Gree's authorized service center. If the unit continues to run in abnormal situations, it may get damaged and cause electric shock or fire hazard.
(2) Do not repair the air conditioner by yourself. Improper maintenance will cause electric shock or fire hazard. Please contact Gree's authorized service center and send for professional service staff to repair.

If the display panel or wired control displays an error code, please refer to the error code meaning stated in the following table.

No.	Error code	Error
1	E1	Compressor high pressure protection
2	E2	Indoor anti-freeze protection
3	E3	Compressor low pressure protection, refrigerant lack protection and refrigerant colleting mode
4	E4	Compressor air discharge high-temperature protection
5	E6	Communication error
6	E8	Indoor fan error
7	E9	Water-full protection
8	F0	Indoor ambient temperature sensor error
9	F1	Evaporator temperature sensor error
10	F2	Condenser temperature sensor error
11	F3	Outdoor ambient temperature sensor error
12	F4	Discharge temperature sensor error
13	F5	Wired control temperature sensor error
14	C5	IDU jumper cap error
15	EE	IDU or ODU memory chip error
16	PF	Electric box sensor error
17	H3	Compressor overload protection
18	H4	Overload
19	H5	IPM protection
20	H6	DC fan error

No.	Error code	Error
21	H7	Driver out-of-step protection
22	HC	Pfc protection
23	Lc	Startup failure
24	Ld	Compressor phase-sequence protection
25	LF	Power protection
26	Lp	IDU and ODU unmatched(The number of indoor units does not match the KIT dial code.)
27	U7	4–way valve switch-over error
28	P0	Driver reset protection
29	P5	Over-current protection
30	P6	Master control and driver communication error
31	P7	Driver module sensor error
32	P8	Driver module high temperature protection
33	P9	Zero-crossing protection
34	PA	AC current protection
35	Pc	Driver current error
36	Pd	Sensor connection protection
37	PE	Temperature drift protection
38	PL	Bus low-voltage protection
39	PH	Bus high-voltage protection
40	PU	Charge loop error
41	PP	Input voltage error
42	ee	Drive memory chip error
43	C4	ODU jumper cap error
44	dJ	Phase-loss and anti-phase protection
45	oE	ODU error, for specific error please see the status of ODU indicator
46	EL	Emergency Stop(Fire alarm)

NOTES:

① When the unit is connected to the wired controller, the wrong code will be displayed on the screen.

② When the unit is connected to the wired controller and displays “N+the above code”, it means the IDU connected to the communication column N on main board will display this error code.

For example: 2F1 means the IDU connected to the communication column 2 on main board appears F1 error.

③ If the wired controller displays 1E6/2E6/3E6/4E6 circularly, please check the communication connection between this product and the outdoor unit.

5.2 Maintenance

Please refer to the specification of relevant indoor for routine maintenance.

5.3 Notice on Maintenance

	WARNING!
(1)	Only professionals are allowed to carry on daily maintenance.
(2)	Before contacting any wire, make sure power is cut off.
(3)	Do not let any inflammable objects near the unit.
(4)	Do not use organic solvent to clean the air conditioner.
(5)	If you need to replace a component, please ask a professional to repair with a component supplied by the original manufacturer so as to ensure the unit’s quality.
(6)	Improper operation may get the unit broken, hit by electric shock or cause fire.
(7)	Do not make the air conditioner wet or electric shock may be lead, ensure that the air conditioner will not be cleaned by water rinsing under any circumstance.

	NOTES!
(1)	Before cleaning, please make sure the unit is stopped. Cut the circuit breaker and remove the power socket, otherwise, electric shock may occur.
(2)	Do not wash the air conditioner with water, otherwise fire hazard or electric shock may occur.
(3)	If you want to replace the assembly, you can obtain the accessory through the nearby GREE office or GREE dealer.

5.4 After-sales Services

Any quality or other issues encountered in the purchased air conditioner, please contact the local Gree after-sales service department.

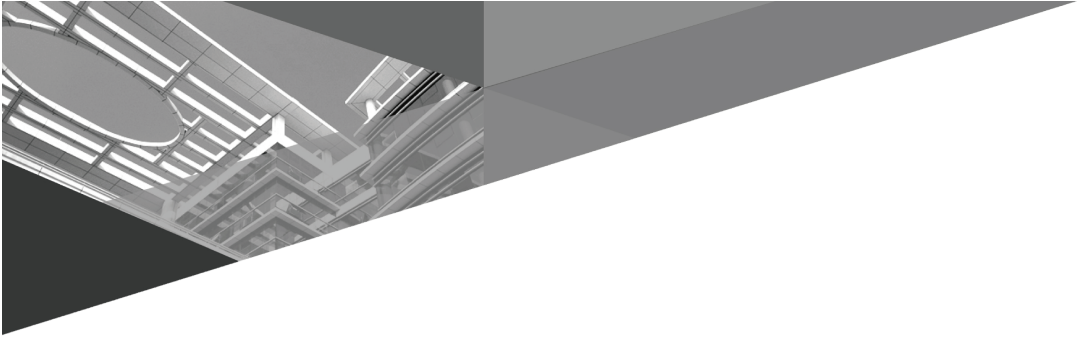

GREE ELECTRIC APPLIANCES, INC. OF ZHUHAI

Add: West Jinji Rd, Qianshan, Zhuhai,Guangdong, China, 519070
Tel: (+86-756) 8522218
Fax: (+86-756) 8669426
E-mail: gree@gree.com.cn www.gree.com

600005062925